HAMMAR®
BETTER SOLUTIONS FOR SAFETY AT SEA

PRODUCT DATA SHEET

H20 HYDROSTATIC RELEASE UNITS FOR RAFT

HS CODE 84798997, Country of Origin SWEDEN



DESCRIPTION

The Hammar H20 is secured to the deck or liferaft cradle and attached to the liferaft lashing. If the ship sinks, the water pressure will activate the sharp knife, which cuts the rope, and the liferaft will float free. As the ship sinks, the liferaft painter line connected to the Red Weak Link™ , will stretch, and the liferaft starts to inflate. The Red Weak Link™ breaks in order to allow the Liferaft to surface.

HYDROSTATIC ACTIVATION DEPTH

Yellow Top Label: 1,5 - 4,0 meters (SOLAS)
Green Top Label : approx. 4 meters
Blue Top Label : approx. 6 meters

WEAK LINK

Breaking strenght: 2,2 ± 0,4 kN
An alternative to the Weak Link™ system is the Red braided polyester line, 4,5mm diameter.

OPERATING TEMPERATURE

-30 to +65°C

SERVICE LIFE

The operational life on board the ship is 2 years (24 months) or otherwise stated on the product when installed.

APPROVED TO STANDARDS*

SOLAS 74 Convention
IMO Res. MSC 97(73)8.1/8.6 (2000 HSC Code)
IMO Res. MSC. 48(66)
IMO Res. MSC.81(70)
IMO MSC/Circ.811, approved to EU Directive 96/98 EC on Marine Equipment

LABEL AND PRODUCT MARKING

Material: UV-resistant and peel-proof material.

Top label
Marcode
Serial number : XXXXX
Manufacturing date: YY/MM
Security number : XXX
Notified body/year: XXXX/YY
Wheel mark when SOLAS approved
NATO Stock Numbers available

*Only applicable for units with yellow Top Label (SOLAS)

H20 R= for Raft, 24 month service life
H20 RX= for Raft, 30 month service life

Date label
For marking of expiry date; month and year.
Years available on date label: 5 years

DUAL ASSEMBLY

Arrangement of release units that includes two or more H20 units are available. These can be in combinaton with MRU or ERU unit.See separate data sheet

TRANSPORT AND STORAGE

The Hammar H20 is a disposable product.

Shelf life: 5 years from manufactured year, provided it is stored in its box in a dry and UV-protected storage.

PACKING SPECIFICATIONS

All H20 standard/RX SOLAS models are packed in individal boxes. To minimize shipping costs, these are packed in boxes containing 30pcs.

Individual box dimension: 17x9x7cm
Outer box dimension: 37x30x37 cm
Approximate packed weight of 30 pcs: 9 kg

Scan the QR code for applicable products

- Do not power wash the HRU
- Do not paint
- If an H20 is dropped or exposed to an impact it shall be discarded

2022 Ver 1

+46 31 70 96 550
info@cmhammar.com
www.cmhammar.com
CM Hammar AB
August Barks gata 15
SE-421 32 Västra Frölunda

SPECIFICATIONS

SPECIFICATIONS	H20 HOUSING	WEAK LINK	ROPE SLING	THIMBLE
SIZE	L:96 mm, w: 64 mm, H: 48 mm	L: 79 mm, W: 52 mm, H: 16 mm	**Loop lenght: 140 mm Diameter; 8 mm	L: 12 mm, W: 36 mm, H: 33 mm
WEIGHT	112 gram	25 gram	28 gram	3 gram
COLOUR	Black	Red & Black	White & black stripes	Yellow
MATERIAL	*Housing:* Polyamid (PA6) *Spring:* Stainless steel *Knife:* Stainless steel	PA6 & Stainless steel	Polyester 1:1, parallel core	PA6
BREAKING STRENGHT	N/A	2,2 ± 0,4 kN	Min; 15 kN	N/A

**Standard loop lenght. Other lenghts are available.

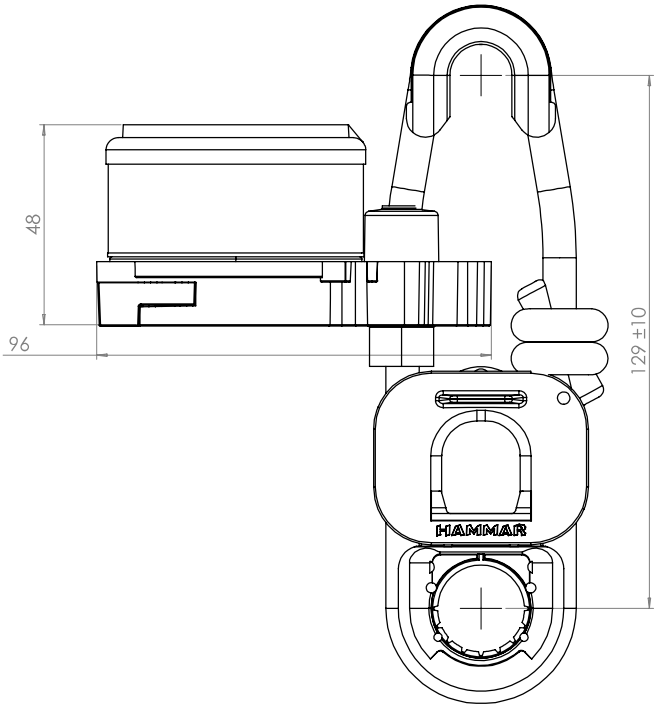

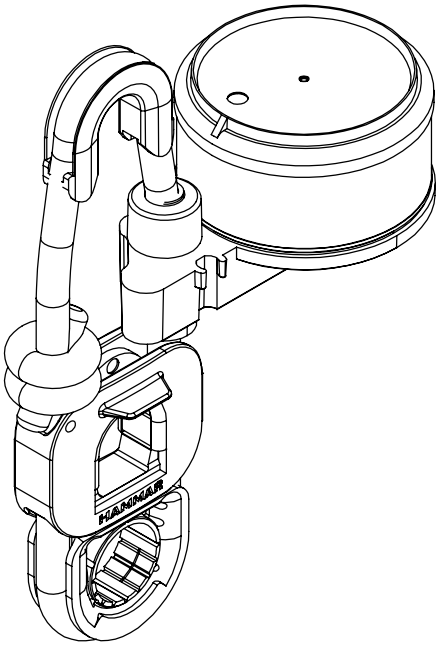

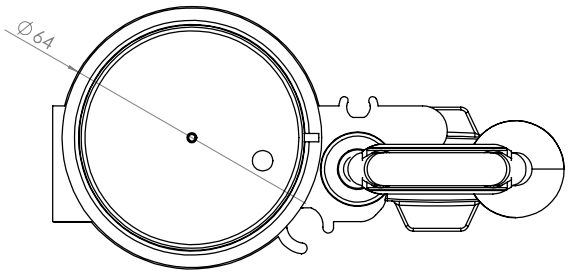

2022 Ver.1

+46 31 70 96 550
info@cmhammar.com
www.cmhammar.com
CM Hammar AB
August Barks gata 15
SE-421 32 Västra Frölunda